International Simposium on Robotics and Automation 2004
August 25-27, 2004
Querétaro. México

The Use of Frontal and Peripheral Perception in a Prey-Catching System

Fernando M. Montes-González Antonio Marín-Hernández

Facultad de Física e Inteligencia Artificial
Universidad Veracruzana
Sebastián Camacho No.5, Centro,
Xalapa, Ver., México
{fmontes, anmarin}@uv.mx

Abstract

The robotic implementation of a basic prey-catching system offers an incremental framework that can be employed to model social behaviors. Avoidance and preference for running next to walls is shown for a simulated prey. In order to chase and locate the prey; the simulated predator presents a switching of behaviors between wandering, tracking, *and* locating. *Computer vision, action selection and reactive robotics act together in the proposed system to control both a simulated prey and predator. Distributed communication, over the TCP/IP protocol, facilitates running the controller of the prey in one computer and the one of the predator in another. Within this framework, experimentation was originally made using a robot simulator; afterwards two Khepera robots were employed. Some encouraging results support the development of a system of this kind.*

1. Introduction

In this paper, we intend to build a simple model of prey-catching that uses frontal and peripheral perception. Complex models of prey-catching behavior are built for helping to understand underlying brain-mechanisms beneath this complex behavior. Existent models in the literature [1] [2] follow this approach by accommodating computer vision and computational neurophysiologic models to switch between reactive and planned behaviors. However, a great baggage of brain knowledge is necessary to accomplish this objective.

Among researches there is a growing consensus that an archaic set of structures in the vertebrate brain, known as the Basal Ganglia, are involved in the control of eye movements and the position of movements in the space. A plethora of information converges at the main input nuclei of these structures in the brain, and they seem to play an important role in solving the problem of action selection [3]. Therefore, a computational model of the Basal Ganglia could accommodate reward signals, modulated by simulated dopamine, in order to control novel and planned saccade movements. Basal Ganglia are related to other structures in the brain that are used to build visual maps, which effectively help in tracking a prey. Furthermore, an implementation of the intrinsic connections in the Basal Ganglia has been embedded in a Khepera robot to simulate the foraging behavior of a laboratory rat [4].

However, the feature extractor characteristic of the input nuclei of the Basal Ganglia has been already compared to sensor fusion in robotics [5]. Therefore, instead of using a complex intrinsic model of the connections in the Basal Ganglia we decided to initiate our work by using vector summation to provide a central action selection mechanism for controlling distributed heterogeneous agents.

The simple prey-catching system we are proposing allows a simulated prey and a predator to wander about a squared box (see Figure 1). In order to provide autonomous control to these animal robots (*animats*), we use computer vision together with both, a reactive and an action selection robotic approach to simulate the chasing of the prey. In the following sections we explain the raison d'être for starting to develop a simple prey-catching system.

In section 2, we propose to use different visual perceptions for controlling our simulated prey and predator. We support our proposal by looking at some characteristics of eye arrangement found in real preys and predators. Section 3 describes how perception is simulated for both the prey and the predator robots, and the mechanisms we use to control these two heterogeneous robots. Then, the implementation of the simple prey-catching system is explained in section 4. Results derived of using this system

are revised in section 5. To conclude, we provide a general discussion as a result for supporting the further development of this system.

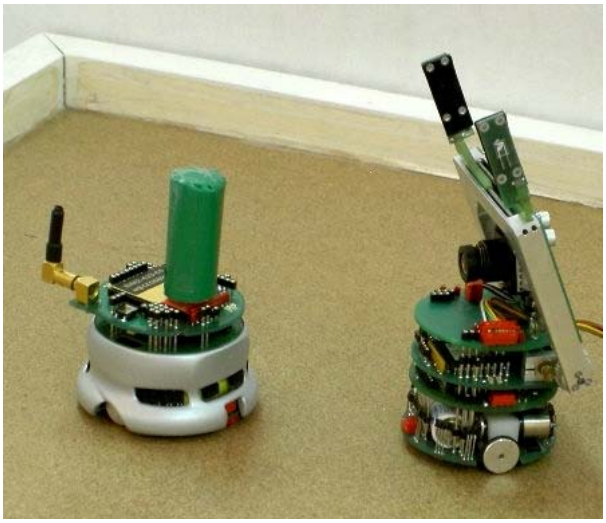

Figure 1. A Khepera robot with an antenna and a green protuberance simulates the prey, and a Khepera robot with a camera and gripper (not used in these experiments) simulates the prey.

2. Eye arrangement in animals and perception in heterogeneous robots

In order to attack a prey successfully, predators rely on acute distance judgment and depth perception. Throughout evolution, nature has provided a frontal field of view for predators by arranging eyes at the front of their heads. In contrast, preys are equipped with a peripheral field of view as a result of an eye-arrangement at the sides of their heads.

For a predator, moving towards a prey makes the difference between surviving or not. Next, chasing the prey ends when a final stroke is taken from a leaping predator. Therefore, a binocular view accomplishes the task of calculating depth perception and distance for the predator to assist him in the chasing of a prey. In our animat we simulate a frontal perception using a CCD camera that points in the same direction than the frontal part of the body of the Khepera. Depth information cannot strictly be reconstructed from images acquired following this approach. Our solution is to provide the robot with an estimation of the size of the surface area that represents the prey in the image acquired from camera calibration.

The use of peripheral vision in preys compromises the amount of binocular vision. However, perceiving the direction of an incoming attack is useful for a prey to escaping in the opposite direction. The prey, we are modeling, has been equipped with a peripheral vision that is not attached to the body of the Khepera.

One of the reasons for choosing this vision-setup obeys the unavailability of an omni-directional camera in our laboratory, though it will be incorporated in future works. Therefore, the aerial camera is used instead of a peripheral view and then the distance between the prey and the predator is calculated from these images. A minimal distance has been predefined in order to simulate the visual field of view of the prey. Additionally, information related to the angle position of the predator is recovered from same image. Using this information the simulated prey is able to react and escape from an imminent attack.

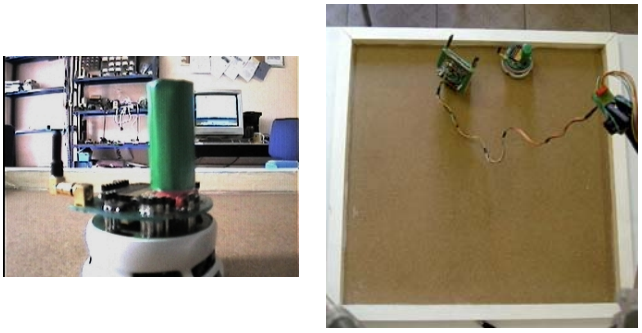

(a) (b)

Figure 2. The Predator and prey perception: a) predator field of view, and b) a world camera where prey and predator position are detected to provide the prey with a peripheral field of view.

3. Perception, Action Selection and Reactive Robotics for controlling heterogeneous robots

In order to control our simulated prey and predator we employed different approaches. On one hand, we used action selection to model a predator with a repertoire of three behaviors that can be selected according to environmental conditions. On the other hand, a simpler controller was used to allow the prey to react to rapid changing environmental conditions, and a reactive control scheme was chosen. In the following we briefly explain both approaches, and how they were used in modeling the prey and the predator. Finally, to coordinate the execution of the controllers we have described, a computational framework using a distributed communication control scheme is needed. The rationale behind the implementation of distributed communication control scheme is explained below in section 4.

3.1. Action Selection and frontal perception

Action selection can be related to the problem of doing the right thing at the right time [6]. Despite, the possible occurrence of multi-selection in animals, a Winner-Take-All (WTA) mechanism can be used to alleviate the urgency of non-homogenous behaviors to be expressed. Traditional models in Artificial Intelligence (AI) implement WTA as distributed fully connected networks, and the disadvantages of this approach have already been pointed out [7] . In contrast, our proposal implements WTA as a central switching mechanism device. Later on, we intend to scale from a simple sensory-driven switching device to a more elaborated model, such as the one found in all the vertebrate animals (e.g. the Basal Ganglia). However, in our basic prey-catching system we use vector summation to produce action selection. Therefore, incoming sensory data from the eight infrared sensors, the shaft encoders in the wheels, and the frontal perception from the color camera in the robot are combined to build a common currency that can be used to control our predator. Activation levels are the common currency we use, and they are calculated by combining different sensor readings. As a consequence, the most relevant behavior among others is selected according to a specific perception of the world, and the winning activity takes over the control of the motors for one time-step. All modules can be resumed and reset at any point of the simulation.

A standard vision turret is attached to Khepera robot, in order to provide a frontal field of the view for the predator. Image processing is used to identify the green-colored hat of the prey within the arena. Acquired images in real time need to be converted from RGB to normalized space, to reduce illumination conditions dependence. Later on, in order to identify the prey in normalized color images, a statistical color segmentation method has been applied. Finally, a clustering method is used to measure the size of the area from the detected prey in the image. As we have already described, this area is used to confirm that a prey is within the frontal perception, and an estimation of the distance between them is calculated. Presence of a close predator certainly affects the calculation of the activation levels and an escaping behavior should be preferred when this occurs.

In our experiments, a WTA action selection mechanism is employed to control the predator. Selection takes place between three different behaviors: wandering, tracking, and locating. Wandering is the default behavior, and when a nearby prey is detected the tracking behavior is activated. Due to the lack of a rear view in the frontal perception of the simulated predator, odometry is used on a regular basis to make a full spin of 360 degrees in order to locate a prey.

3.2. Reactive Robotics and peripheral perception

A controller based on the reactive robotics paradigm throws away the PLAN component used in deliberative AI schemes (SENSE-PLAN-ACT), and prompts a robot to react in a rapid changing world (SENSE-ACT). In this fashion, robots can be seen as Braitenberg vehicles [8] that pose direct connections between sensors and wheel motors. As a result, we use direct weighted connections from the infrared sensors of the Khepera to drive the simulated prey in the arena. The aerial view of the hanging camera provides the peripheral field of view for the prey. Real-time image acquisition from this camera facilitates the calculation of the minimal distance between the predator and the prey.

Therefore, peripheral perception is included as an additional weighted sensor connection that indicates the minimal distance between prey and predator. The overall behavior of the prey can be summarized as showing a preference for running close to walls, and escaping when a predator is in the near proximity.

4. Prey-catching system implementation

4.1. Webots Simulator and Execution Scheme

Webots is a robot simulator that provides a 3D environment for experimenting with several robots, and one of the robots that can be simulated using this software is the Khepera robot. Furthermore, this software can be used to control a real Khepera through a RS32 serial interface.

Within a main loop, Webots allows robots to request sensing and actuating at every step of the simulation. Actuators are attended within an elapsed 64 milliseconds iteration, and sensor requests are delayed to the next iteration. The simulator also facilitates the use of written code in C, C++ and Java, which can be easily distributed over several platforms (OS X, Linux and Windows). Using the TCP/IP protocol, the simulated environment can be interfaced to third party software such as Matlab, Lisp and LabView.

4.2. Final framework for the prey and the predator

Initially, we tested our system in the Webots robot simulator and later in two Khepera robots (Figures 1, 2 and 3). In our experiments, for both settings, we used a Khepera robot with a green protuberance (or hat) to model a prey. Also a Khepera equipped with a video turret (CCD color camera) was used to model the predator.

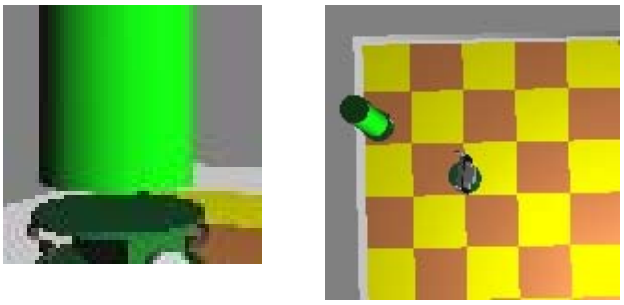

(a) (b)

Figure 3. The prey (b) and the predator (a) perceptions were initially simulated using Webots.

In order to provide a *360-degree of field vision* to the prey (nicknamed "scratchy"), we use an aerial view of the arena provided by a digital camera hanging below the ceiling and fasten by a standard camera tripod. In contrast, a frontal field of view [39deg (H) x 28 (V)] was provided for the nicknamed predator "scratchy.

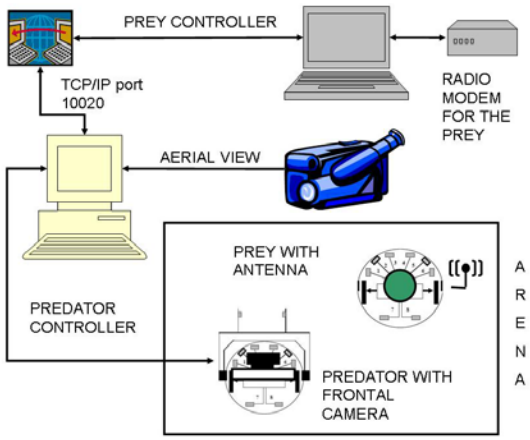

Figure 4. Control architecture for the simulated prey and the predator.

Experiments were conducted in the following manner: two Khepera robots were put in the center of a walled arena. A standard video extension turret was attached to one of the Khepera (*itchy*), and then the Khepera was connected to a PC computer using the provided connectors from the manufacturer. A serial RS232 interface was connected to the computer for controlling the robot. Composite video from the turret was sent to a standard BT848 frame grabber using a BNC connector.

Scratchy was equipped with a radio turret that allows the robot to move within a radius of 10 m. The radio base station was plugged to a notebook computer providing a connection up to 9600 bps for controlling the robot. A digital video camera was used to process real-time images from the aerial view of the arena (see Figure 4). Images were processed in real-time on the PC and the calculation of the minimal distance between prey and predator was sent over TCP/IP to the notebook. It is important to notice that the notebook could be connected to a broader network using a WI-FI connection. By using this setup we provided a control scheme for the prey and the predator with distributed computer facilities. Next, we describe some results obtained using this framework setup.

5. Results

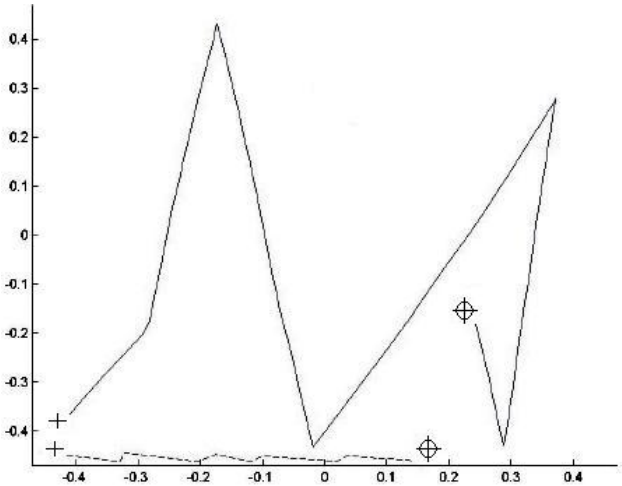

Figure 5. Typical chasing of a simulated prey. A straight line represents itchy, and scratchy is represented using a dashed line. Crossed circles indicate the starting of the behavior and crosses indicates the ending of the behavior.

In order to analyze our simple prey-catching behavior we show a typical chasing of a prey. Afterward we describe and summarize the behavior of the predator as an ethogram and related statistics. Occasionally, we have observed that although the predator almost hits the prey, it fails to perceive it (as shown in Figure 5). Soon after, in the same figure, it can be noticed that the way out of the prey is blocked in the corner. Missing perception from both the prey and the predator occurs when they move at relatively the same speed. Further experiments may use variable speeds to avoid this drawback of our present system.

Usually a predator spends most of its time wandering about until a prey is located. Wandering, locating and tracking behaviors are constantly interrupted because action selection is made, using vector summation, at every step of the simulation.

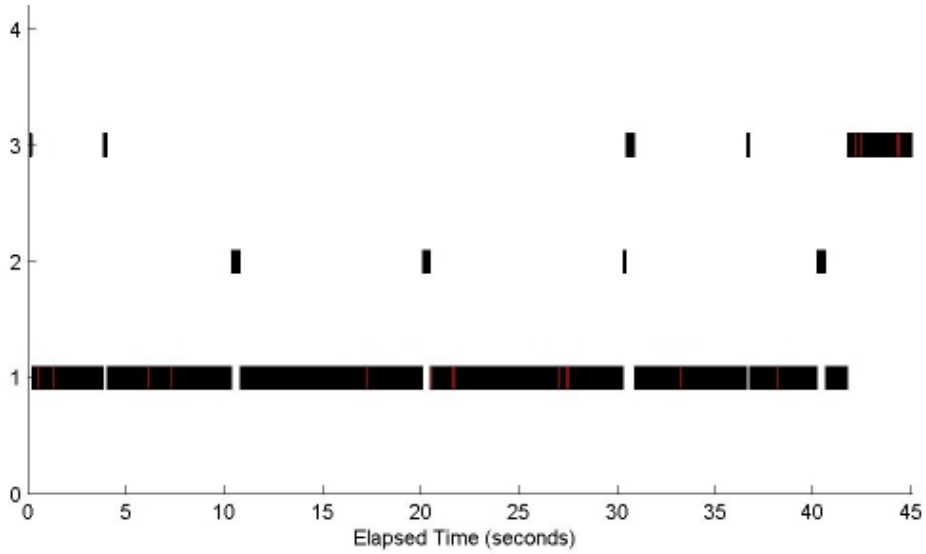

Figure 6. Ethogram for a typical run of the simple prey-catching behavior

Behavioral Elements	Freq	Latency	TotDur	TotDur%	Mean	StdDev	StdErr	MinDur	MaxDur
wandering	2053.00	0.20	39.28	85.89	0.02	0.01	0.00	0.00	0.14
locating	76.00	10.38	1.40	3.07	0.02	0.01	0.00	0.01	0.05
tracking	243.00	0.10	4.95	10.82	0.02	0.01	0.00	0.01	0.14
none	1.00	0.00	0.10	0.22	0.10	0.00	0.00	0.10	0.14
Total	2373.00	0.00	45.73	100.00	0.02	0.01	0.00	0.00	0.14

Table 1. Elementary statistics for a representative run

Long periods of wandering culminate in regular periods of tracking. If tracking does not occur, locating is occasionally selected (Figure 6).

Wandering is the behavior that is selected most of the time, with an 86 % of the overall time (46 seconds), as observed in Table 1. Secondly, tracking is executed an 11 % of the time. Finally, locating is the behavior that is selected the less with a 3 % and is first selected after 10.38 seconds of the elapsed time.

6. General discussion

Initial results proved that simple controllers could be embedded in a distributed framework to simulate the prey-catching behavior. However, to continue the development of visual perception, it would be desirable to use a more biological model of action selection like the Basal Ganglia. The inclusion of a more complex model of action selection will require a more elaborated framework, which could be used to implement social behaviors. Examples of these behaviors may include displacement behaviors (fight-flight), foraging behaviors by multi-agents teams (homogenous swarms), and cooperation of heterogeneous teams.

Further experiments in our prey-catching system may incorporate a colored scheme for modeling levels of nutritious food. Hence, different preys could be chased depending on the internal necessities of the predator and the environmental setting. Although, the attached gripper was not used in these experiments, later on it can be used to collect objects that can be used to obstruct the escaping route of the prey. Variable speeds could also be used to avoid obstacles and incoming predators.

References

[1] J. W. Brown, D. Bullock, and S. Grossberg, "How laminar frontal cortex and basal ganglia circuits interact to control planned and reactive saccades," vol. Neural Networks, pp. 471-510, 2004.

[2] F. Cervantes-Perez, L. Flores-Castillo, A. Weitzenfeld, and R. C. Arkin, "Neuronal networks working at multiple temporal scales as a basis for amphibia's prey-catching behavior," Journal of Adaptive Behavior.

[3] T. J. Prescott, K. Gurney, F. Montes Gonzalez, M. Humphries, and P. Redgrave, "THE ROBOT BASAL GANGLIA: Action selection by an embedded model of the basal ganglia," in *Basal Ganglia VII*, R. e. a. Faulls, Ed. New York: Kluwer Academic/Plenum Press., 2002.

[4] F. Montes Gonzalez, T. J. Prescott, K. Gurney, M. Humphries, and P. Redgrave, "An embodied model of action selection mechanisms in the vertebrate brain," in *From Animals to Animats 6: Proceedings of the 6th International Conference on the Simulation of Adaptive Behavior*, J. A. Meyer, Ed. Cambridge, MA: MIT Press, 2000.

[5] F. Montes Gonzalez and A. Marin Hernandez, "Central Action Selection using Sensor Fusion," presented at 5th Mexican International Conference on Computer Science.

[6] P. Maes, "How to Do the Right Thing," *Connection Science Journal*, vol. Vol. 1, pp. 291-323, 1989.

[7] T. J. Prescott, P. Redgrave, and K. N. Gurney, "Layered control architectures in robots and vertebrates," *Adaptive Behavior*, vol. 7, pp. 99-127, 1999.

[8] V. Braitenberg, *Vehicles: experiments in synthetic psychology*. Cambridge, MA: MIT Press, 1986.